Homework #3 Solutions

10 points per problem.

Problem 1: 4-1(c)

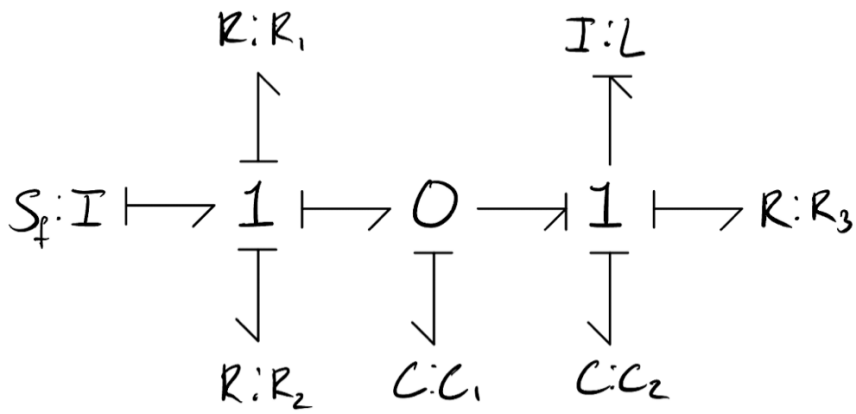

State variables: q_1, q_2, λ

$$\dot{q_1} = i_{C1} = I - i_L = I - \frac{\lambda}{L}$$

$$\dot{q_2} = i_{C2} = i_L = \frac{\lambda}{L}$$

$$\dot{\lambda} = V_L = V_{C1} - V_{R3} - V_{C2} = \frac{q_1}{C_1} - R_3\frac{\lambda}{L} - \frac{q_1}{C_2}$$

$$\begin{bmatrix} \dot{q_1} \\ \dot{q_2} \\ \lambda \end{bmatrix} = \begin{bmatrix} 0 & 0 & -\frac{1}{L} \\ 0 & 0 & \frac{1}{L} \\ \frac{1}{C_1} & -\frac{1}{C_2} & -\frac{R_3}{L} \end{bmatrix} \begin{bmatrix} q_1 \\ q_2 \\ \lambda \end{bmatrix} + \begin{bmatrix} 1 \\ 0 \\ 0 \end{bmatrix} I$$

Problem 2: 4-1(e)

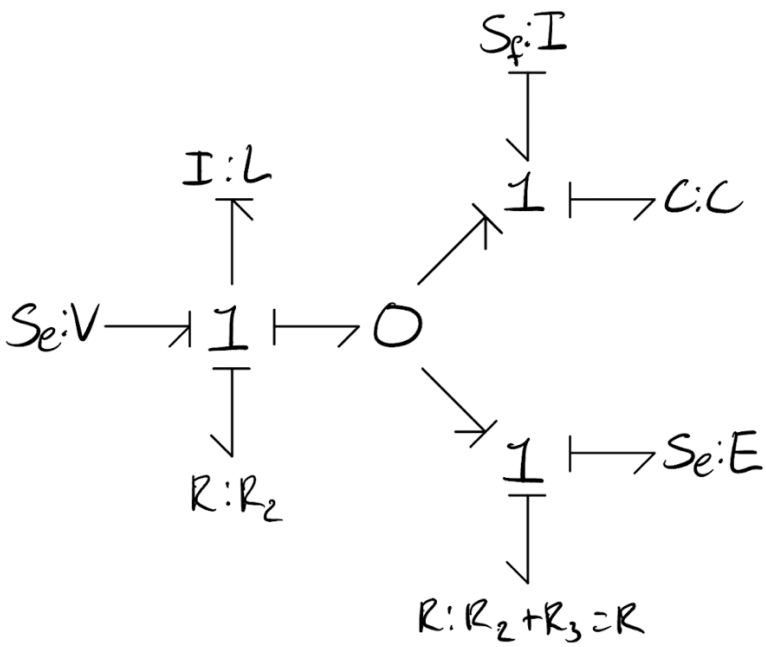

State variables: λ, q

$$\dot{q} = i_C = I$$

$$\dot{\lambda} = V_L = V - V_{R1} - V_x = V - \frac{\lambda}{L}R_1 - (V_R + E)$$

$$V_R = i_R R = (i_L - I_x)R = \left(\frac{\lambda}{L} - I\right)R$$

$$\dot{\lambda} = V - \frac{\lambda}{L}R_1 - E - \frac{\lambda}{L}R + IR$$

$$= V - \frac{\lambda}{L}(R_1 + R_2 + R_3) + I(R_2 + R_3) - E$$

$$\begin{bmatrix} 0 & 0 \\ 0 & -\dfrac{R_1 + R_2 + R_3}{L} \end{bmatrix} \begin{bmatrix} q \\ \lambda \end{bmatrix} + \begin{bmatrix} 0 & 0 & 1 \\ 1 & -1 & R_2 + R_3 \end{bmatrix} \begin{bmatrix} V \\ E \\ I \end{bmatrix}$$

Problem 3: 4-1(h)

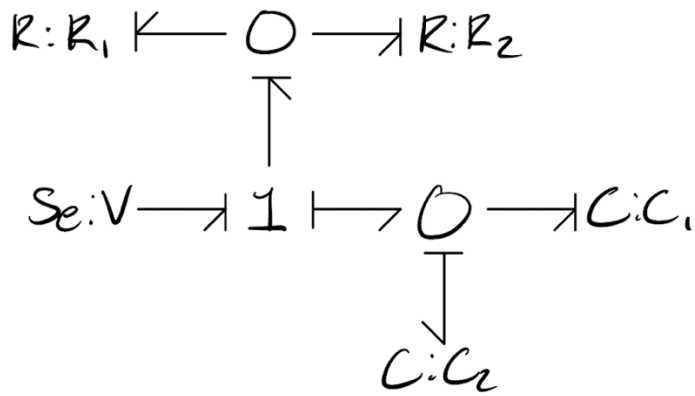

State variable: q_2

$$\dot{q_2} = i_{C2} = i - i_{C1} = V_X \frac{(R_1 + R_2)}{R_1 + R_2} - \dot{q_1}$$

$$= \frac{R_1 + R_2}{R_1 R_2}(V - V_{C2}) - C_1 \dot{V_{C1}}$$

$$\dot{q_2} = \frac{R_1 + R_2}{R_1 R_2}\left(V - \frac{q_2}{C_2}\right) - C_1 \frac{\dot{q_2}}{C_2}$$

$$\left(1 + \frac{C_1}{C_2}\right)\dot{q_2} = \frac{R_1 + R_2}{R_1 R_2}\left(V - \frac{q_2}{C_2}\right)$$

$$\dot{q_2} = (\frac{C_2}{C_1 + C_2})(\frac{R_1 + R_2}{R_1 R_2})(V - \frac{q_2}{C_2})$$

Problem 4: 4-3(g)

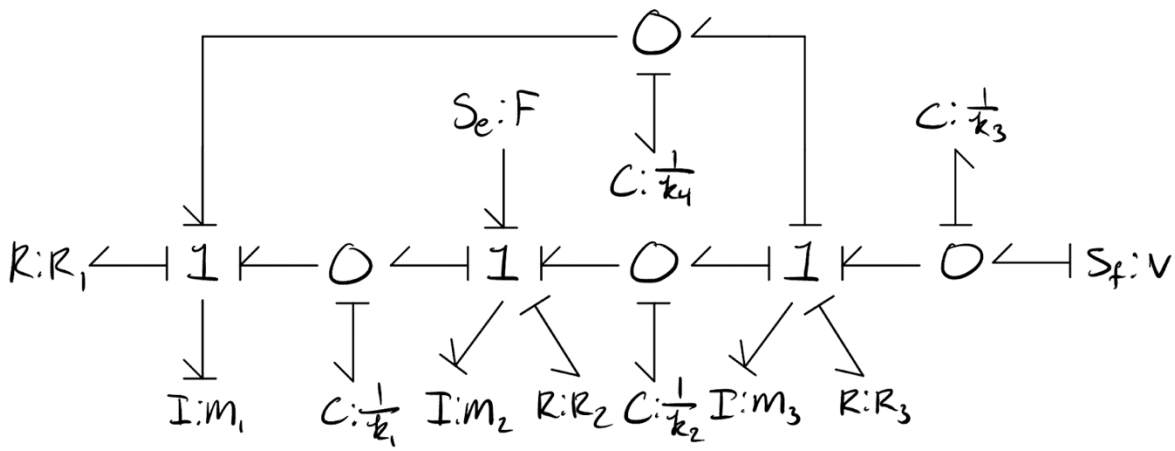

State variables: $P_1, X_{k1}, P_2, X_{k2}, P_3, X_{k3}, X_{k4}$

$$\dot{X}_{k1} = V_{k1} = V_2 - V_1 = \frac{P_2}{m_2} - \frac{P_1}{m_1}$$

$$\dot{X}_{k2} = V_{k2} = V_3 - V_2 = \frac{P_3}{m_3} - \frac{P_2}{m_2}$$

$$\dot{X}_{k3} = V_{k3} = V - V_3 = V - \frac{P_3}{m_3}$$

$$\dot{X}_{k4} = V_{k4} = V_3 - V_1 = \frac{P_3}{m_3} - \frac{P_1}{m_1}$$

$$\dot{P}_1 = F_{m1} = F_{k1} + F_{k4} - F_{R1} = k_1 X_{R1} + k_4 X_{k4} - b_1\left(\frac{P_1}{m_1}\right)$$

$$\dot{P}_2 = F_{m2} = F_{k2} + F - F_{R2} - F_{k1} = k_2 X_{k2} + F - b_2\left(\frac{P_2}{m_2}\right) - k_1 X_{k1}$$

$$\dot{P}_3 = F_{k3} - F_{R3} - F_{k4} - F_{k2} = k_3 X_{k3} - b_3\left(\frac{P_3}{m_3}\right) - k_4 X_{k4} - k_2 X_{k2}$$

Where $F_R\left(\frac{P}{m}\right)$ is the general nonlinear friction term. If linear, $F_R = b\left(\frac{P}{m}\right)$.

$$
\begin{bmatrix} \dot{X}_{k1} \\ \dot{X}_{k2} \\ \dot{X}_{k3} \\ \dot{X}_{k4} \\ \dot{P}_1 \\ \dot{P}_2 \\ \dot{P}_3 \end{bmatrix} = \begin{bmatrix} 0 & 0 & 0 & 0 & -\frac{1}{m_1} & \frac{1}{m_2} & 0 \\ 0 & 0 & 0 & 0 & 0 & -\frac{1}{m_2} & \frac{1}{m_3} \\ 0 & 0 & 0 & 0 & 0 & 0 & -\frac{1}{m_3} \\ 0 & 0 & 0 & 0 & -\frac{1}{m_1} & 0 & \frac{1}{m_3} \\ k_1 & 0 & 0 & k_4 & \frac{b_1}{m_1} & 0 & 0 \\ -k_1 & k_2 & 0 & 0 & 0 & -\frac{b_2}{m_2} & 0 \\ 0 & -k_2 & k_3 & -k_4 & 0 & 0 & -\frac{b_3}{m_3} \end{bmatrix} \begin{bmatrix} X_{k1} \\ X_{k2} \\ X_{k3} \\ X_{k4} \\ P_1 \\ P_2 \\ P_3 \end{bmatrix} = \begin{bmatrix} 0 & 0 \\ 0 & 0 \\ 0 & 1 \\ 0 & 0 \\ 0 & 0 \\ 1 & 0 \\ 0 & 0 \end{bmatrix} \begin{bmatrix} F \\ V \end{bmatrix}
$$

Problem 5: 4-3(h)

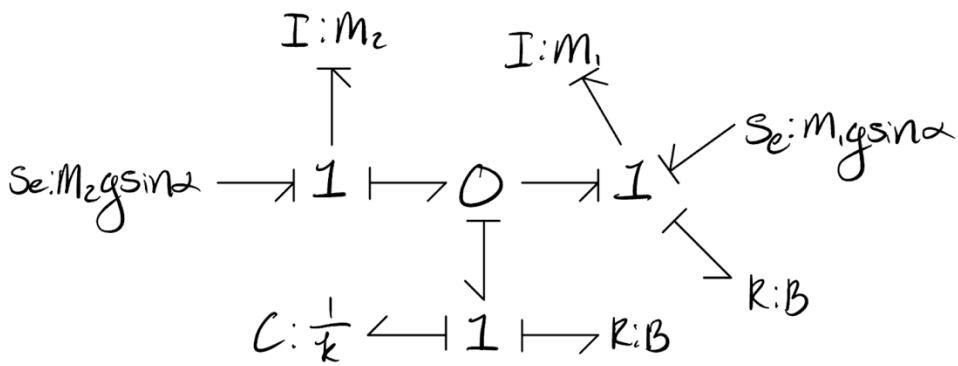

State variables: P_1, P_2, X_k

$$\dot{x_k} = V_k = V_2 - V_1 = \frac{P_2}{M_2} - \frac{P_1}{M_1}$$

$$\dot{P}_1 = F_{M1} = F_1 + M_1 g sin(\alpha) - F_R$$

$$F_1 = F_k + F_B = kX_k + B\dot{V}_B$$

$$= kX_k + B\left(\frac{P_2}{M_2} - \frac{P_1}{M_1}\right)$$

$$F_R = bV_1 = b\frac{P_1}{M_1}$$

$$= kX_k + B\left(\frac{P_2}{M_2} - \frac{P_1}{M_1}\right) + M_1 g sin(\alpha) - b\frac{P_1}{M_1}$$

$$\dot{P}_2 = F_{M2} = M_2 g sin(\alpha) - F_1$$

$$= M_2 g sin(\alpha) - kX_k - B\left(\frac{P_2}{M_2} - \frac{P_1}{M_1}\right)$$

$$\begin{bmatrix} \dot{X}_k \\ \dot{P}_1 \\ \dot{P}_2 \end{bmatrix} = \begin{bmatrix} 0 & -\frac{1}{M_1} & \frac{1}{M_2} \\ k & -\frac{B+b}{M_1} & \frac{B}{M_2} \\ -k & \frac{B}{M_1} & -\frac{B}{M_2} \end{bmatrix} \begin{bmatrix} X_k \\ P_1 \\ P_2 \end{bmatrix} + \begin{bmatrix} 0 & 0 \\ 1 & 0 \\ 0 & 1 \end{bmatrix} \begin{bmatrix} M_1 g sin(\alpha) \\ M_2 g sin(\alpha) \end{bmatrix}$$

Problem6: 4-5(e)

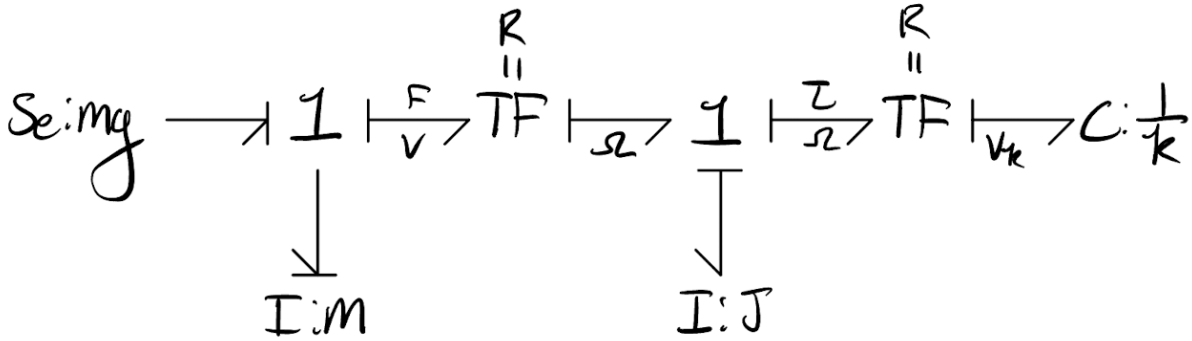

State variables: P, X_k

$$\dot{X}_k = V_k = \Omega R = \frac{V}{R} R = V_m = \frac{P_m}{m}$$

$$\dot{P} = F_m = mg - F = mg - \frac{\tau}{R} = mg - \frac{1}{R}(\tau_J + \tau)$$

$$= mg - \frac{1}{R}(\dot{h} + FR) = mg - \frac{1}{R}(J\dot{\Omega} + kX_R R)$$

$$= mg - \frac{1}{R}\left(J_m \frac{\dot{P}}{R} + kX_k R\right)$$

$$\left(1 + \frac{J}{mR^2}\right)\dot{P} = mg - kX_k$$

$$\dot{P} = \frac{mg - kX_k}{1 + \frac{J}{mR^2}}$$

$$\begin{bmatrix} \dot{X}_k \\ \dot{P} \end{bmatrix} = \begin{bmatrix} 0 & \frac{1}{m} \\ -\frac{k}{1 + \frac{J}{mR}} & 0 \end{bmatrix} \begin{bmatrix} X_k \\ P_m \end{bmatrix} + \begin{bmatrix} 0 \\ \frac{1}{1 + \frac{J}{mR^2}} \end{bmatrix} mg$$

Problem 7: 4-5(a)

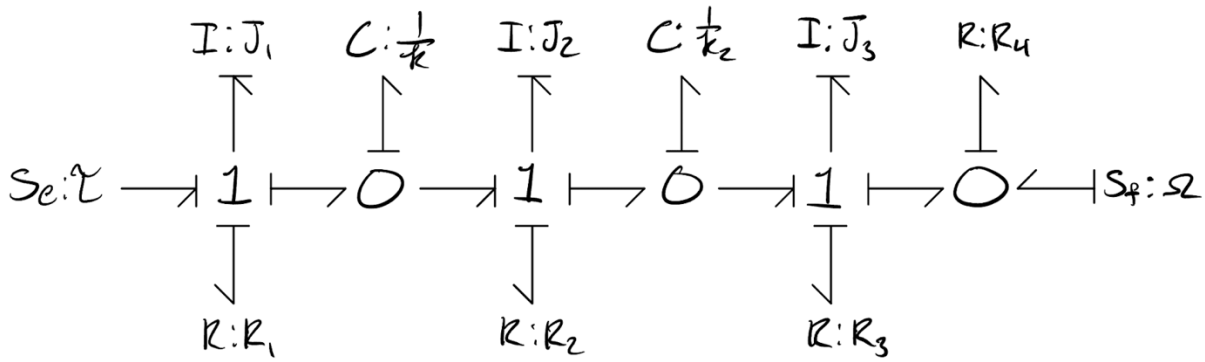

State variables: $h_1, \theta_1, h_2, \theta_2, h_3$

$$\theta_{K1} = \Omega_{K1} = \Omega_1 - \Omega_2 = \frac{h_1}{J_1} - \frac{h_2}{J_2}$$

$$\dot{\theta_{K2}} = \Omega_{K2} = \Omega_2 - \Omega_3 = \frac{h_2}{J_2} - \frac{h_3}{J_3}$$

$$\dot{h_1} = T_{J1} = \tau - \tau_{R1} - \tau_{K1} = \tau - R_1 \frac{h_1}{J_1} - K_1 \theta_{K1}$$

$$\dot{h_2} = T_{J2} = \tau_{K1} - \tau_{R2} - \tau_{K2} = K_1 \theta_{K1} - R_2 \frac{h_2}{J_2} - K_2 \theta_{K2}$$

$$\dot{h_3} = T_{J3} = \tau_{K2} - \tau_{R3} - \tau_{R4}$$

$$= K_2 \theta_{K2} - R_3 \frac{h_3}{J_3} - R_4 \left(\frac{h_3}{J_3} + \Omega \right)$$

$$\begin{bmatrix} \dot{\theta_{K1}} \\ \dot{\theta_{K2}} \\ \dot{h_1} \\ \dot{h_2} \\ \dot{h_3} \end{bmatrix} = \begin{bmatrix} 0 & 0 & \frac{1}{J_1} & -\frac{1}{J_2} & 0 \\ 0 & 0 & 0 & \frac{1}{J_2} & -\frac{1}{J_3} \\ -K_1 & 0 & -\frac{R_1}{J_1} & 0 & 0 \\ K_1 & -K_2 & 0 & -\frac{R_2}{J_2} & 0 \\ 0 & K_2 & 0 & 0 & -\frac{R_3 + R_4}{J_3} \end{bmatrix} \begin{bmatrix} \theta_{K1} \\ \theta_{K2} \\ h_1 \\ h_2 \\ h_3 \end{bmatrix} + \begin{bmatrix} 0 & 0 \\ 0 & 0 \\ 1 & 0 \\ 0 & 0 \\ 0 & -R_4 \end{bmatrix} \begin{bmatrix} \tau \\ \Omega \end{bmatrix}$$

Problem 8: 4-5(d)

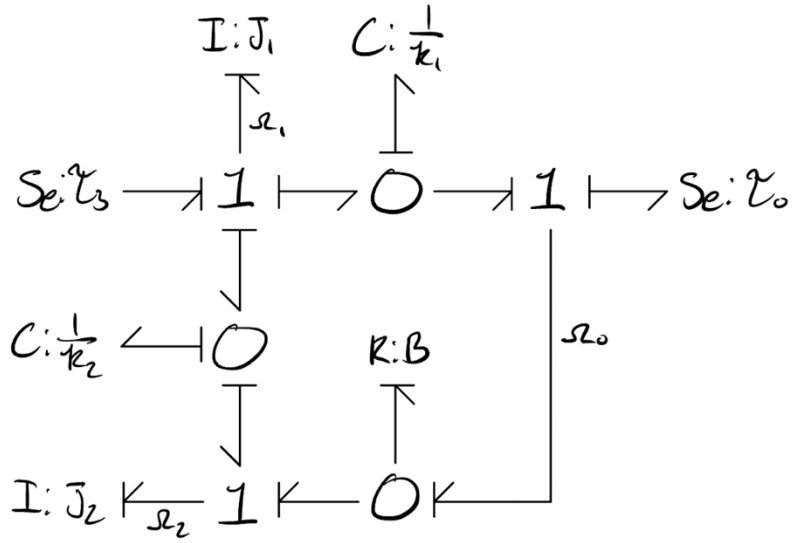

State variables: $h_1, h_2, \theta_{k1}, \theta_{k2}$

$$\dot{\theta_{k1}} = \Omega_{k1} = \Omega_1 - \Omega_0 = \frac{h_1}{J_1} - (\Omega_B + \Omega_2)$$

$$= \frac{h_1}{J_1} - \frac{T_B}{B} - \frac{h_2}{J_2}$$

$$= \frac{h_1}{J_1} - \frac{h_2}{J_2} - \frac{1}{B}(T_{k1} - \tau_0)$$

$$= \frac{h_1}{J_1} - \frac{h_2}{J_2} - \frac{k_1\theta_{k1}}{B} + \frac{\tau_0}{B}$$

$$\dot{\theta_{k2}} = \Omega_{k2} = \Omega_1 - \Omega_2 = \frac{h_1}{J_1} - \frac{h_2}{J_2}$$

$$\dot{h_1} = \tau_{J1} = \tau_1 - \tau_{k2} - \tau_{k1}$$

$$= \tau_1 - k_2\theta_{k2} - k_1\theta_{k1}$$

$$\dot{h_2} = \tau_{J2} = \tau_{k2} + \tau_B = k_2\theta_{k2} + (k_1\theta_{k1} - \tau_0)$$

$$= k_2\theta_{k2} + k_1\theta_{k1} - \tau_0$$

$$\begin{bmatrix} \dot{\theta}_{k1} \\ \dot{\theta}_{k2} \\ \dot{h}_1 \\ \dot{h}_2 \end{bmatrix} = \begin{bmatrix} -\frac{k_1}{B} & 0 & \frac{1}{J_1} & -\frac{1}{J_2} \\ 0 & 0 & \frac{1}{J_1} & -\frac{1}{J_2} \\ -k_1 & -k_2 & 0 & 0 \\ k_1 & k_2 & 0 & 0 \end{bmatrix} \begin{bmatrix} \theta_{k1} \\ \theta_{k2} \\ h_1 \\ h_2 \end{bmatrix} + \begin{bmatrix} 0 & \frac{1}{B} \\ 0 & 0 \\ 1 & 0 \\ 0 & -1 \end{bmatrix} \begin{bmatrix} \tau_1 \\ \tau_0 \end{bmatrix}$$

Problem 9: 4-19)

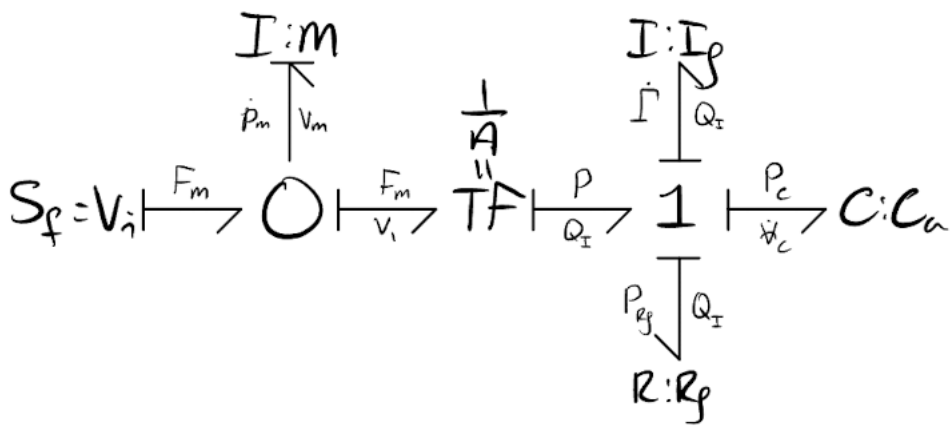

$$3\ ES\ Es: I = m, I = I_f, C = C_a$$

$$2\ S\forall s = p_m, (\Gamma_I), \forall_c$$

$$V_m = \frac{p_m}{m} \qquad Q_I = \frac{\Gamma_I}{I_f} \qquad P_c = \frac{\forall_c}{C_a}$$

$$P_{Rf} = R_f Q_I \qquad \dot{p_m} = F_m$$

$$TF: P = \frac{F_m}{A}, V_1 = \frac{Q_I}{A}$$

Starting with general displacement

$$\dot{\forall_C} = Q_I = AV_1 = A(V_i - V_m) = A\left(V_i - \frac{p_m}{m}\right)$$

$$\dot{p_m} = F_m = PA = A\left(\dot{\Gamma}_I + P_C + P_{Rf}\right)$$

Where

$$\Gamma_I = I_f Q_I$$

$$= I_f A \left(V_i - \frac{p_m}{m}\right)$$

$$= I_f A V_i - \frac{I_f A}{m} p_m$$

$$\dot{\Gamma}_I = I_f A \dot{V}_i - \frac{I_f A}{m} \dot{p_m}$$

Thus

$$\dot{p_m} = A\left[I_f A \dot{V}_i - \frac{I_f A}{m}\dot{p_m} + \frac{\forall}{C_a} + R_f Q_I\right]$$

$$= I_f A^2 V_2 - \frac{I_f A^2}{m}\dot{p_m} + \frac{A}{C_a}\forall_C + AR_f\left(AV_i - \frac{A}{m}p_m\right)$$

$$\left(1 + \frac{I_f A^2}{m}\right)\dot{p_m} = I_f A^2 \dot{V}_i + R_f A^2 V_i + \frac{A}{C_a}\forall_C - \frac{A^2 R_f}{m} p_m$$

$$\dot{p_m} = \frac{m I_f A^2}{m + I_f A^2}\dot{V}_i + \frac{m R_f A^2}{m + I_f A^2} V_i + \frac{mA}{C_a\left(m + I_f A^2\right)}\forall_C - \frac{R_f A^2}{m + I_f A^2} p_m$$

$$\begin{bmatrix} \dot{p_m} \\ \dot{\forall_C} \end{bmatrix} = \begin{bmatrix} -\frac{R_f A^2}{m + I_f A^2} & \frac{mA}{C_a\left(m + I_f A^2\right)} \\ -\frac{A}{m} & 0 \end{bmatrix} \begin{bmatrix} p_m \\ \forall_C \end{bmatrix} + \begin{bmatrix} \frac{m R_f A^2}{m + I_f A^2} & \frac{m I_f A^2}{m + I_f A^2} \\ A & 0 \end{bmatrix} \begin{bmatrix} V_i \\ \dot{V}_i \end{bmatrix}$$

Problem 10: 4-21)

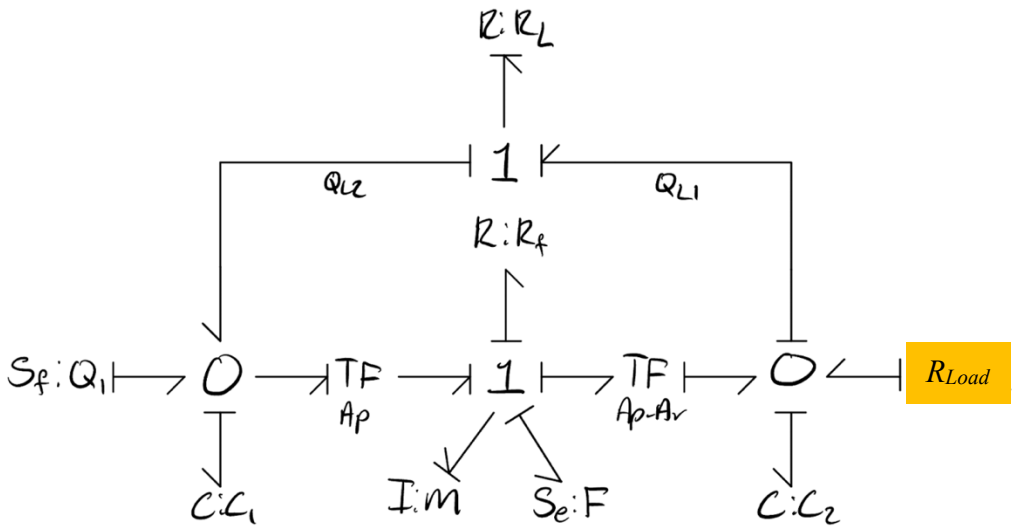

State variables: $U_{C1} = C_1, U_{C2} = C_2, P = M$

$$\dot{U_{C1}} \equiv Q_{C1} = Q_1 - A_p\left(\frac{P}{m}\right) + Q_L = Q_1 + \frac{1}{R_L}(P_{C2} - P_{C1}) - \frac{A_p}{m}p$$

$$= Q_1 + \frac{1}{R_L}\left(\frac{\forall_2}{C_2} - \frac{\forall_1}{C_1}\right) - \frac{A_p}{m}p$$

$$\dot{U_{C2}} \equiv Q_{C2} = \frac{P}{m}(A_p - A_r) - \frac{U_{C2}}{C_2 R_{Load}} - Q_L$$

$$\dot{P} \equiv F_m = F_1 + F - F_2 - F_B = \frac{U_{C1}}{C1}A_p - \frac{U_{C2}}{C_2}(A_p - A_r) - \frac{B_p}{m} + F$$

Where

$$Q_L = \frac{P_L}{R_L} = \frac{P_2 - P_1}{R_L} = \frac{1}{R_L}\left(\frac{U_{C2}}{C_2} - \frac{U_{C1}}{C_1}\right)$$

So that

$$U_{C2} = Q_1 - A_p\left(\frac{P}{m}\right) - \frac{U_{C2}}{R_L C_2}\frac{R_L R_{Load}}{R_L + R_{Load}} + \frac{U_{C1}}{C_1 R_L}$$

$$\begin{bmatrix} \dot{U_{C1}} \\ \dot{U_{C2}} \\ \dot{P} \end{bmatrix} = \begin{bmatrix} -\frac{1}{C_1 R_L} & \frac{1}{C_2 R_L} & -\frac{A_p}{m} \\ \frac{1}{C_1 R_L} & -\frac{1}{C_2}\frac{R_L R_{Load}}{R_L + R_{Load}} & \frac{A_p - A_r}{m} \\ \frac{A_p}{C_1} & -\frac{A_p - A_r}{C_2} & -\frac{B}{m} \end{bmatrix} \begin{bmatrix} U_{C1} \\ U_{C2} \\ P \end{bmatrix} + \begin{bmatrix} 1 & 0 \\ 0 & 0 \\ 0 & -1 \end{bmatrix} \begin{bmatrix} Q_1 \\ F \end{bmatrix}$$

Note: These equations reduce to those of case 3 when $R_L \to \infty$